REVISION HISTORY			
Rev	DESCRIPTION	DATE	APPROVED

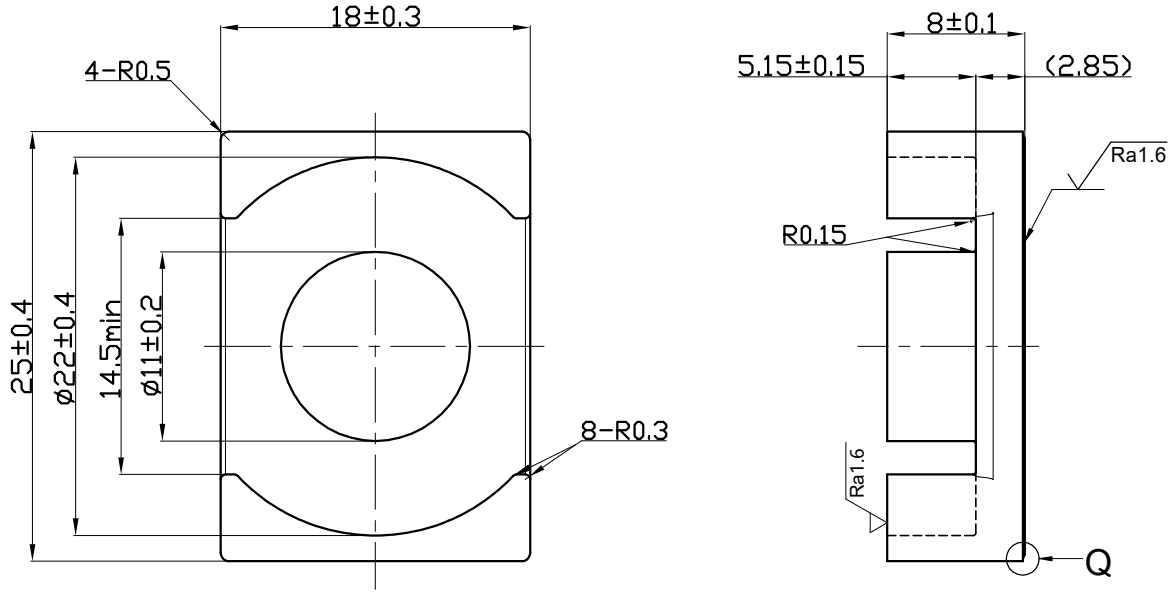

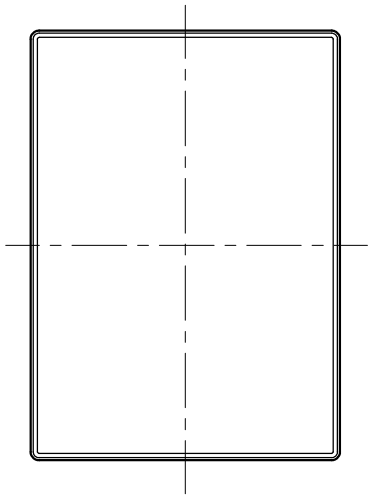

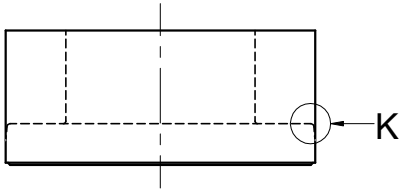

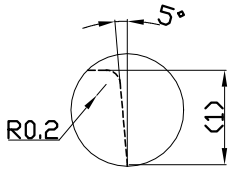

Detail K

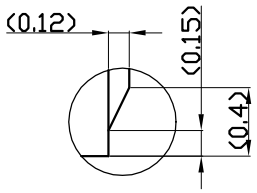

Detail Q

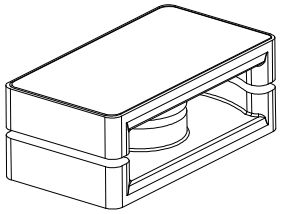

	Scale 2: 1	Material	Customer Part number	
Unit: mm	Standard tolerances ±0.2		Product Name EER-25-16-18	
Approved by T.Tachibana	Created by Z.zhang	Document type Production drawing	Rev 00	Drawing No. PY230225M09
Proterial Hong Kong Limited Panyu factory			Date of issue Feb 25 2023	Sheet 1/1